Block Diagram:

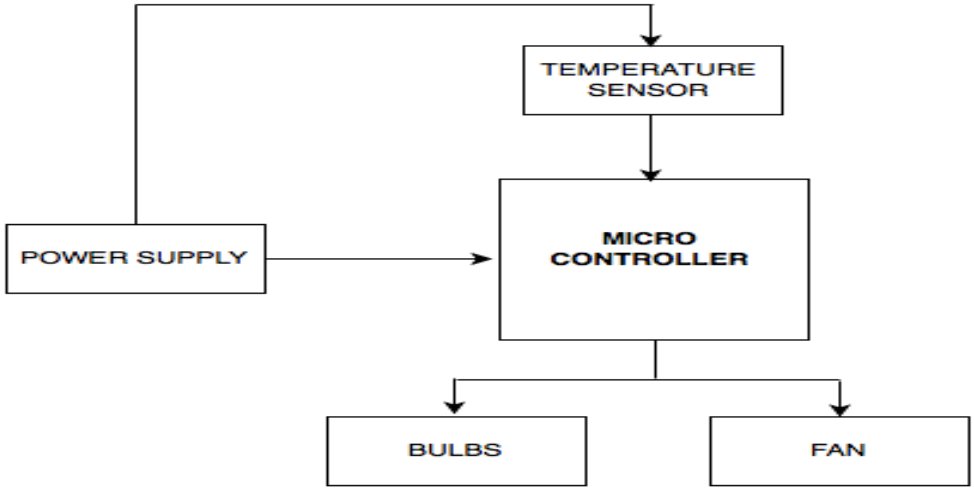

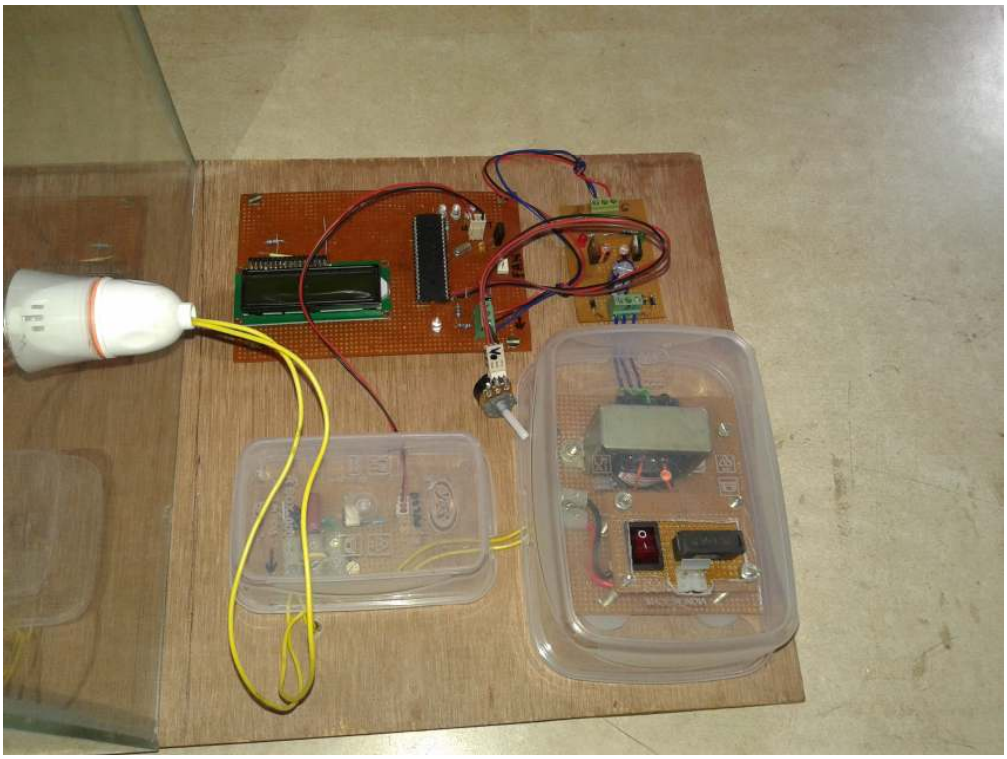

SJEC-3987